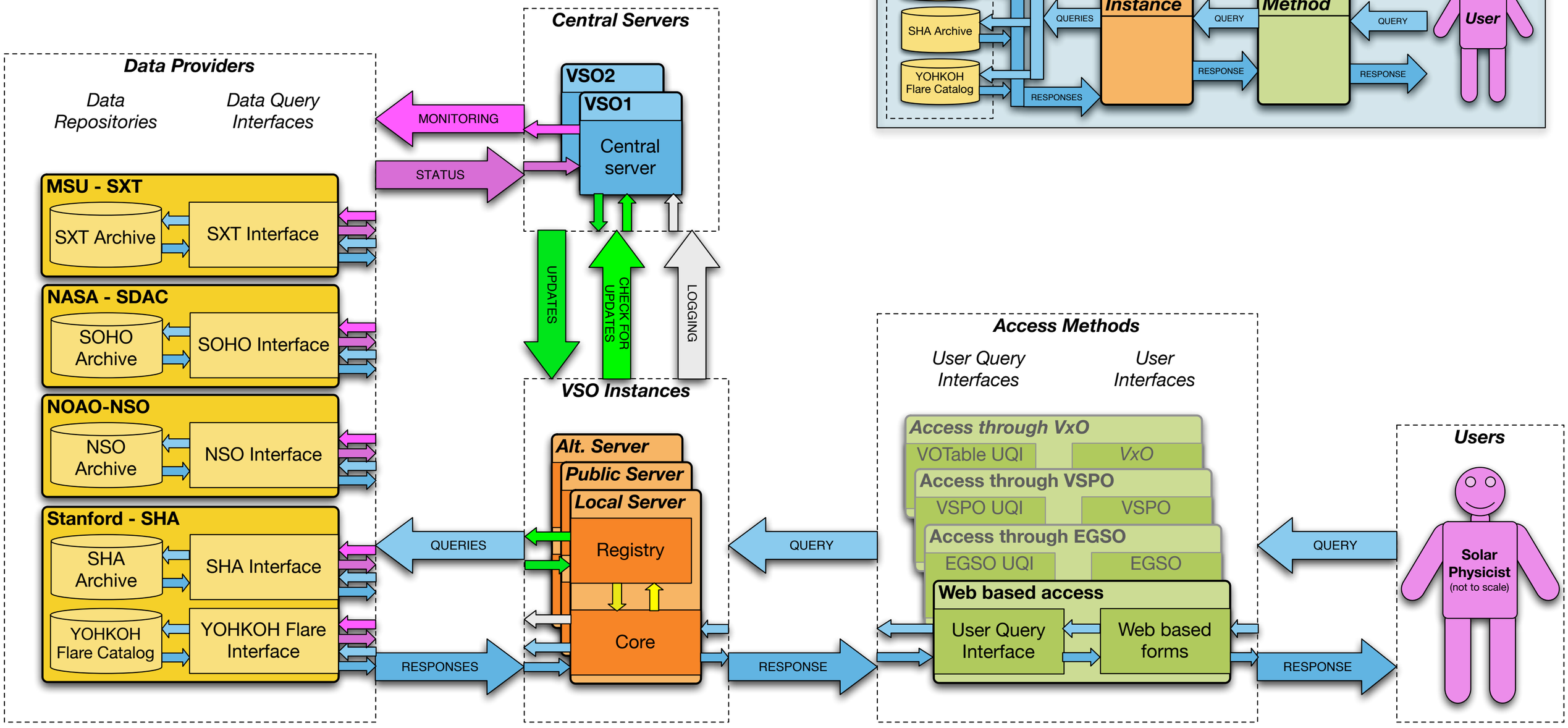Underlying Complexity